SIGG™

MULTITOOL 16-IN-1
Gebrauchsanweisung

MULTITOOL 16-IN-1
Instructions for use

MULTIHERRAMIENTA 16 EN 1
Mode d'emploi

MULTITOOL 16-IN-1
Istruzioni per l'uso

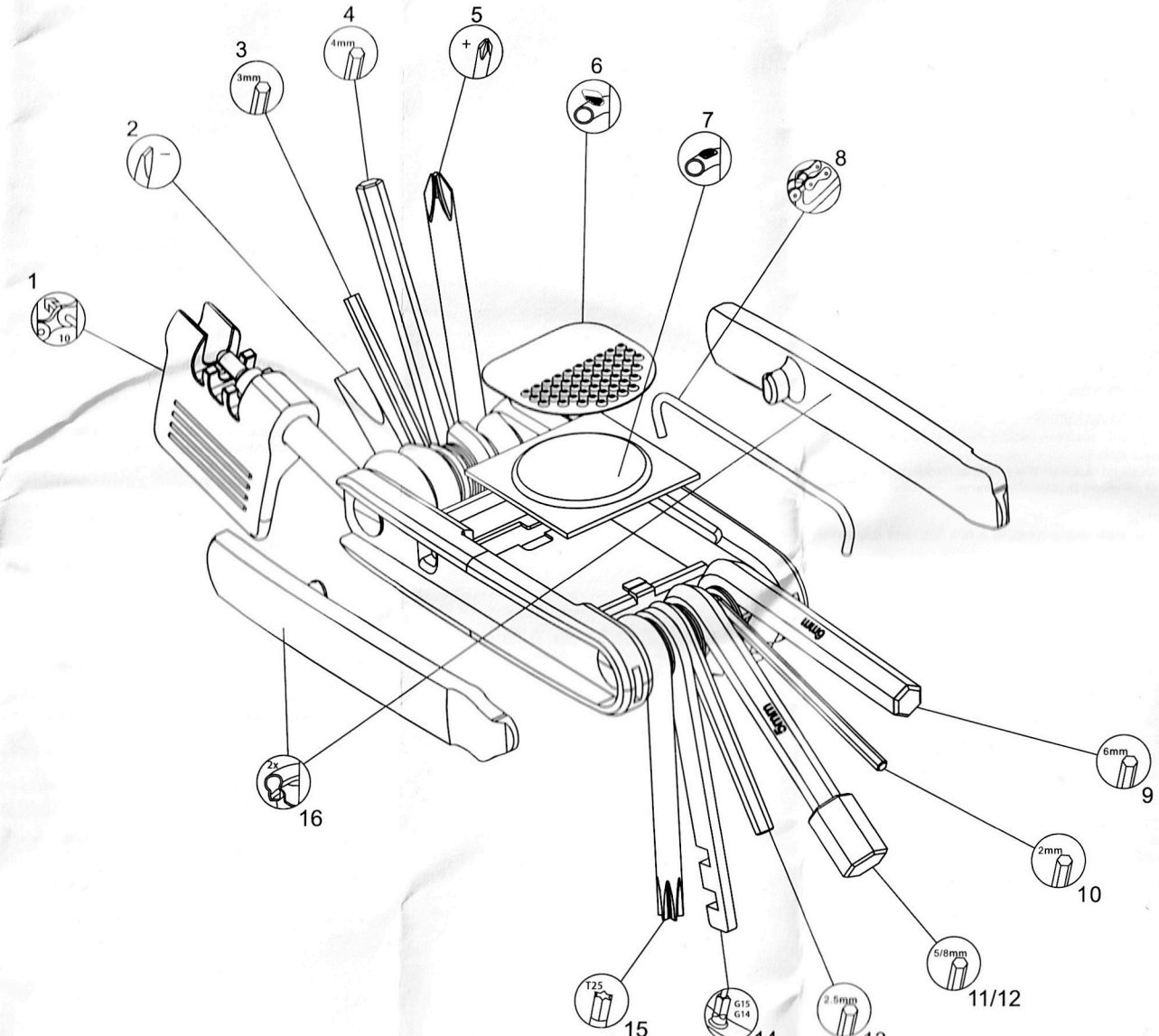

SIGG™ is a registered trademark of
SIGG Switzerland Bottles AG

Manufactured and distributed by

EN Congratulations!
You have chosen to purchase a high-quality product. Familiarise yourself with the product before using it for the first time.

Read the following instructions for use carefully.
Use the product only as described and only for the given areas of application. Store these instructions for use carefully. When passing the product on to third parties, please also hand over all accompanying documents.

Scope of delivery (fig. A)

1. Chain tool
2. Slot screwdriver
3. Allen wrench 3 mm
4. Allen wrench 4 mm
5. Philips screwdriver
6. Tyre file
7. Tyre patch
8. Chain hook
9. Allen wrench 6 mm
10. Allen wrench 2 mm
11./12. Allen wrench 5 mm and 8 mm attachment
13. Allen wrench 2.5 mm
14. Spoke wrench G14–G15
15. Torx T25
16. Tyre lifter

Technical data

Length: approx. 9,1 cm
Dimensions (folded): approx. 9,1 x 4,6 x 2,5 cm (L x W x H)

Intended use

- This product is made for small-scale handicraft work and does not replace full-function tools.
- It is designed for private use and is not suitable for commercial purposes.
- The tool is only designed to be used by adults.

Cleaning

Clean the multifunctional tool regularly with a damp cloth and dry it thoroughly afterwards. After cleaning, apply a light machine oil or similar to the hinges.

DANGER risk of injury

- Take carewhile opening, closing, using and cleaning the product to avoid catching your fingers. While folding the ooll, make sure that there are no fingers or other obstacles between the tool and the handles!
- Only open and work with one tool at a time. All other tools must be folded in. Before using it, ensure that the tool is compeletly unfolded.
- Make sure to always fold the tool up completely after using it.
- Check the multifunctional tool for damage before every use. It must not be used if it is damaged.
- Do not work the tool on live power circuits.

DANGER to children

- The product is not a toy. Keep it out of reach for children while in use and stored away.
- Keep the packaging material out of reach for children. Pieces can be a risk of suffocation!

Disposal

In the interest of protecting the environment, do not throw your product into the household waste once you are finished with it, but rather take it to a specialty disposal facility. Find out about collection sites and their hours of operation from your local authority. Packaging materials, such as plastic bags, must be kept away from children. Keep the packaging materials out of reach of children. Dispose of the product and packaging in an environmentally friendly manner. Note the label on the packaging materials when separating waste, as these are labelled with abbreviations (a) and numbers (b) with the following meaning: 1-7: plastics/20-22: paper and cardboard/80-98: composite materials. The product and the packaging materials can be recycled, dispose of them separately for better treatment of waste. The Triman logo only applies to France. Find out how to dispose of the used product from your municipal or city administration.

Notes on the guarantee and service handling

The warranty period amounts to **2 YEARS** from the date of purchase. Contact our customer service team for more information.
Service/contact:
L-founders of loyalty Sourcing B.V.,
Magistratenlaan 16,
5223 MD, 's-Hertogenbosch,
The Netherlands
customerservice@L-founders.com

LSI-E01-AC105